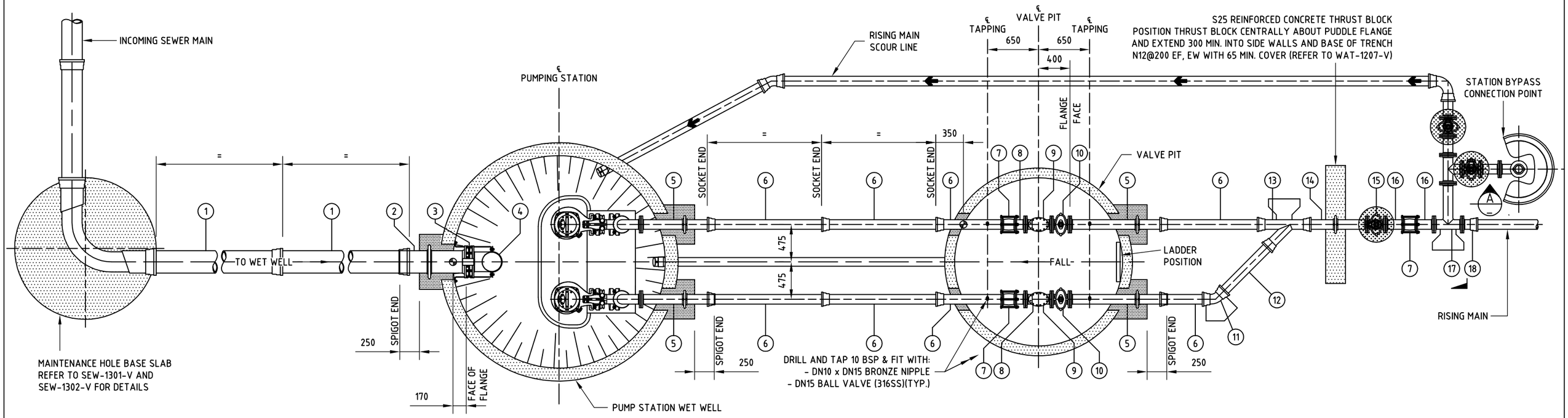

PLAN ON PIPEWORK

SCALE 1: 50

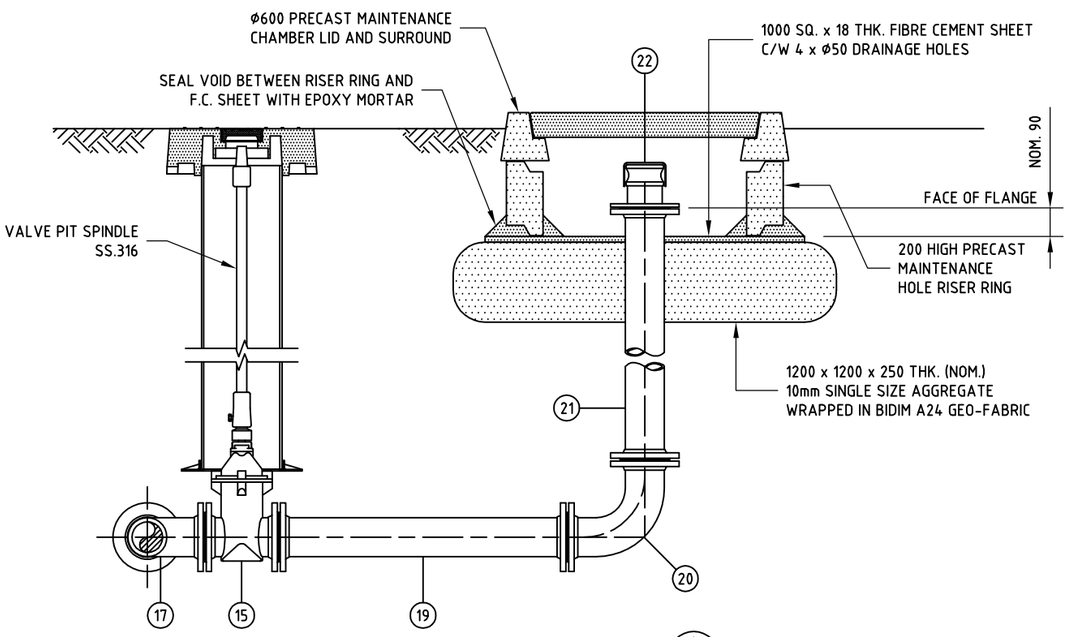

ENLARGED SECTION A

SCALE 1: 20

NOTES:

1. FOR PIPE AND FITTING DETAILS REFER TO SCP-913.
2. FOR BLOCKOUT REPAIR DETAILS REFER TO SCP-901.

REV. N°	REVISION	APPROV	DATE
0	CONSTRUCTION ISSUE	S.H.	1/06/2016

© COPYRIGHT HUNTER WATER CORPORATION

APPROVED

APPROVED

MANAGER
ASSET MANAGEMENT

HUNTER WATER

STANDARD CONSTRUCTION PRACTICE

SEWERAGE STANDARD

SEWAGE PUMPING STATIONS
TYPICAL PIPEWORK ARRANGEMENT AND DETAILS
PLAN

CAD FILE NAME: SCP-912

SCP-912

ISSUED: 2016

A3